REV	ECN NO	DESCRIPTION	DRN	APP'D	DATE

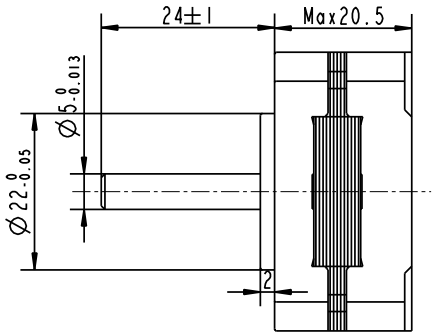

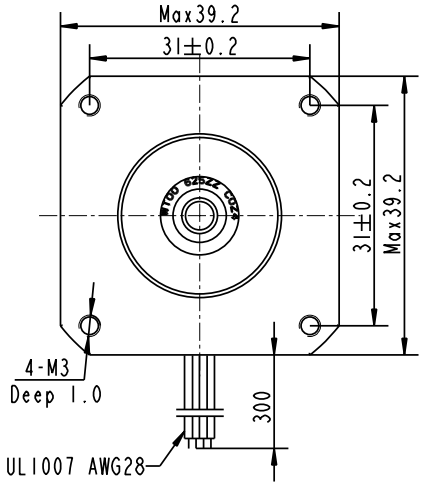

Wiring Diagram (接线图)

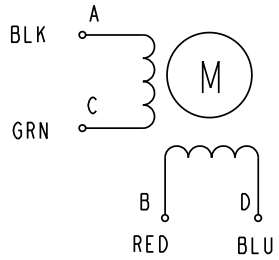

Exciting Sequence(励磁顺序)

CW DIRECTION	STEP	A	C	B	D
⇩	1	+		+	
	2		+	+	
	3		+		+
	4	+			+
	1	+		+	

CW, see from flange side(顺时针 从法兰侧看)

STEP ANGLE	步距角	1.8°
STEP ANGLE ACCURACY	步距角精度	±5%
NUMBER OF PHASE	绕组相数	2
RATED VOTAGE	额定电压	2.64 VDC
RATED CURRENT	额定电流	0.4 A
RESISTANCE/PHASE	每相电阻	6.6±10% OHMS@20°C
INDUCTANCE/PHASE	每相电感	6.0±20% mH@1kHz
HOLDING TORQUE	保持转矩	650 g.cm
PULL OUT TORQUE	运行转矩	
BACK EMF	反电动势	
DETENT TORQUE	定位转矩	50 g.cm
ROTOR INERTIA	转子转动惯量	11 g.cm²
WEIGHT	重量	120 g
TEMPERATURE RISE	温升	less than 80K(小于80开)
SOURCE VOLTAGE	驱动器电压	24 VCD
INSULATION CLASS	绝缘等级	B 130°C
DIELECTRIC STRENG	介电强度	500VAC 1MIN
INSULATION RESIST	绝缘电阻	100MOhm @500VCD
IP CODE	防护等级	IP30
OPERATION AMBIENT	使用环境	Ambient temperature:-25...+40°C,humidity Max.85%(No condensation)
STORAGE AMBIENT	存储环境	Ambient temperature:-10...+35°C,humidity Max.85%(No condensation)

PERMISSIBLE RADIAL+AXIAL FORCE
(允许轴向和径向力)

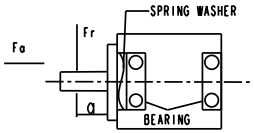

AXIAL-FORCE	轴向压力	Fa=10 N Max
DISTANCE	距离	a=10 mm
RADIAL-FORCE	径向压力	Fr=28 N Max
SHAFT RADIAL PLAY	径向间隙	0.02mm Max.@4N
SHAFT AXIAL PLAY	轴向间隙	0.08mm Max.@4N

REV	ECN NO.	DESCRIPTION
A		

UNLESS OTHERWISE SPECIFIED
TOLERANCES:
DECIMALS: ANGULAR:
.X ±0.5 ±0°30'
.XX ±0.25
.XXX ±0.1
UNIT: mm
DO NOT SCALE DRAWING

MATERIAL | CONTR.

FIRST ANGLE PROJECTION

DESIGN | DATE
CHECK
APPD
SCALE 1:1
SHEET 1 OF 1

P/N. 3.1.01.039.0003
TITLE 电机
USED ON FL39ST20-0404A
DWG NO. | REV A

FULLING MOTOR